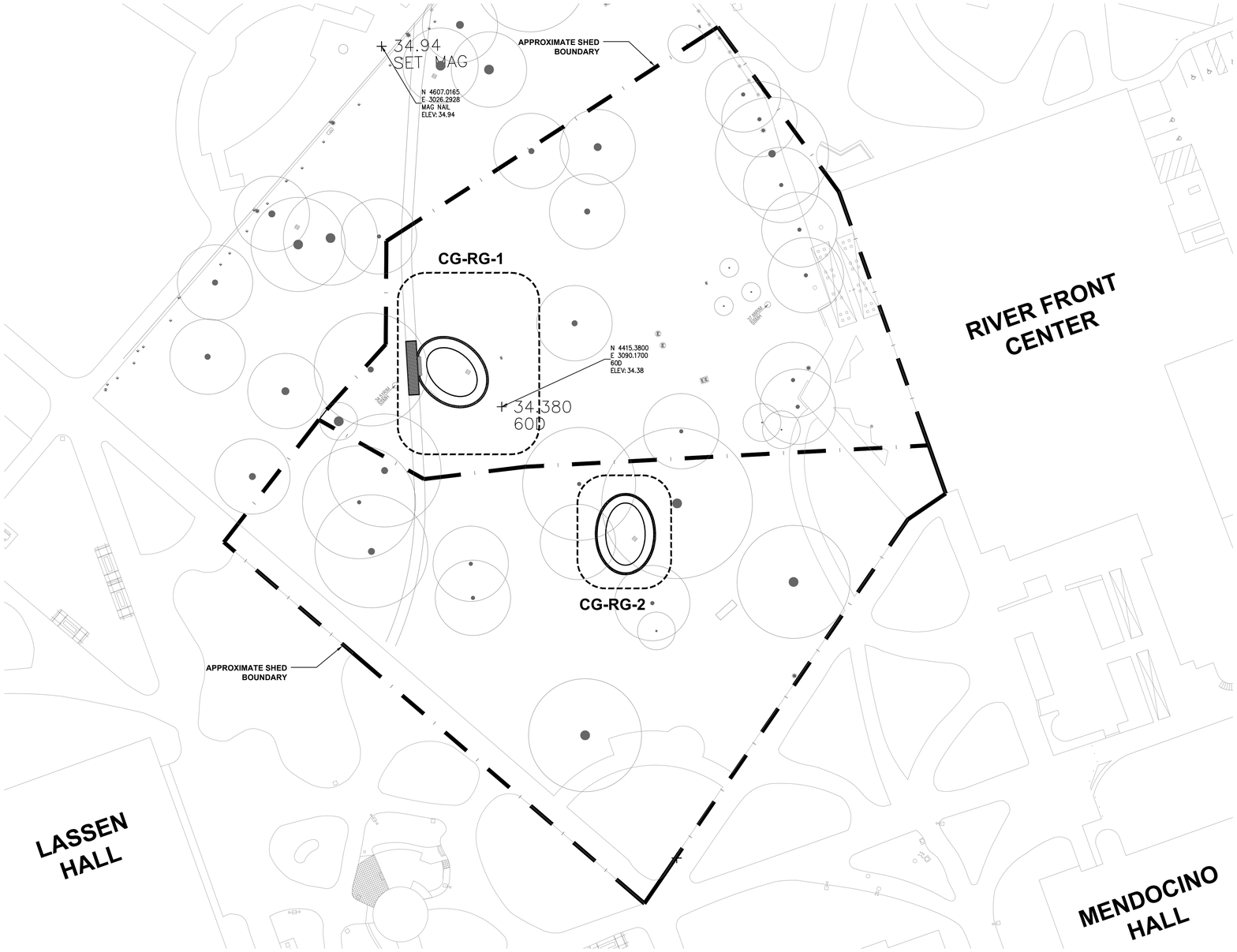

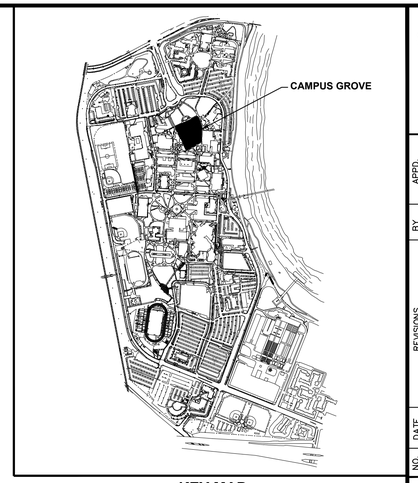

KEY MAP
NTS

0 15 30 60 90
SCALE IN FEET

DATE SIGNED: _____
THESE DRAWINGS ARE NOT CONSIDERED FINAL UNTIL THE ENGINEER'S SEAL BELOW HAS BEEN SIGNED AND DATED.

REGISTERED PROFESSIONAL ENGINEER
DANIEL A. FENOCCHIO
No. C51484
CIVIL
STATE OF CALIFORNIA

NO.	DATE	REVISIONS	BY	APPD.

DESIGNED BY NC
DRAWN BY NC
CHECKED BY DF
SCALE 1" = 30'

CECWEST.COM
Project Planning ■ Civil Engineering ■ Landscape Architecture
■ Sacramento Office
2120 20th Street, Suite Three
Sacramento, CA 95818
(916) 455-2026
■ Davis Office
2940 Spafford Street, Suite 200
Davis, CA 95618
(530) 792-2026

CUNNINGHAM ENGINEERING

CONSTRUCTION DOCUMENTS
CSUS LID STORMWATER SYSTEM
CAMPUS GROVE
SITE PLAN

CALIFORNIA STATE UNIVERSITY, SACRAMENTO
CALIFORNIA

SHEET
CG-C1
OF
6

DATE: 4/24/2015
JOB NO: 1432.01

S:\Projects\1400\1432 CSUS - LID Storm Water System\AutoCAD\1432-01-CIVIL CD's\SHEETS\CG - C1 - SITE.dwg - CG-C1 OVERALL SITE PLAN 4/13/2015 - 9:43AM Plotted by: charles

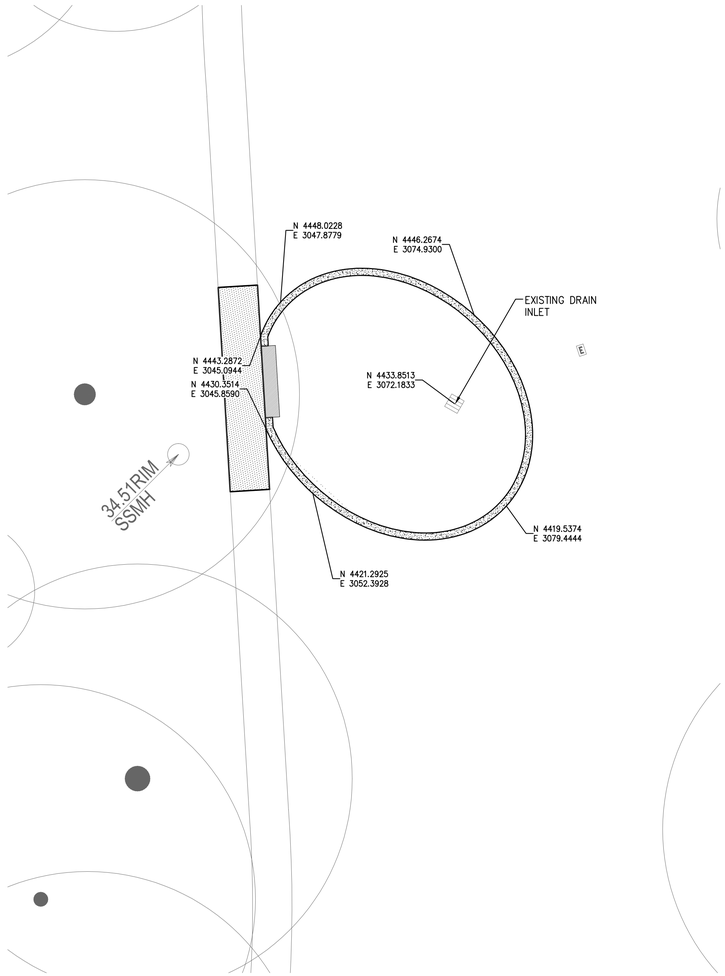

CG - RG - 1

RAIN GARDEN 1"=10'

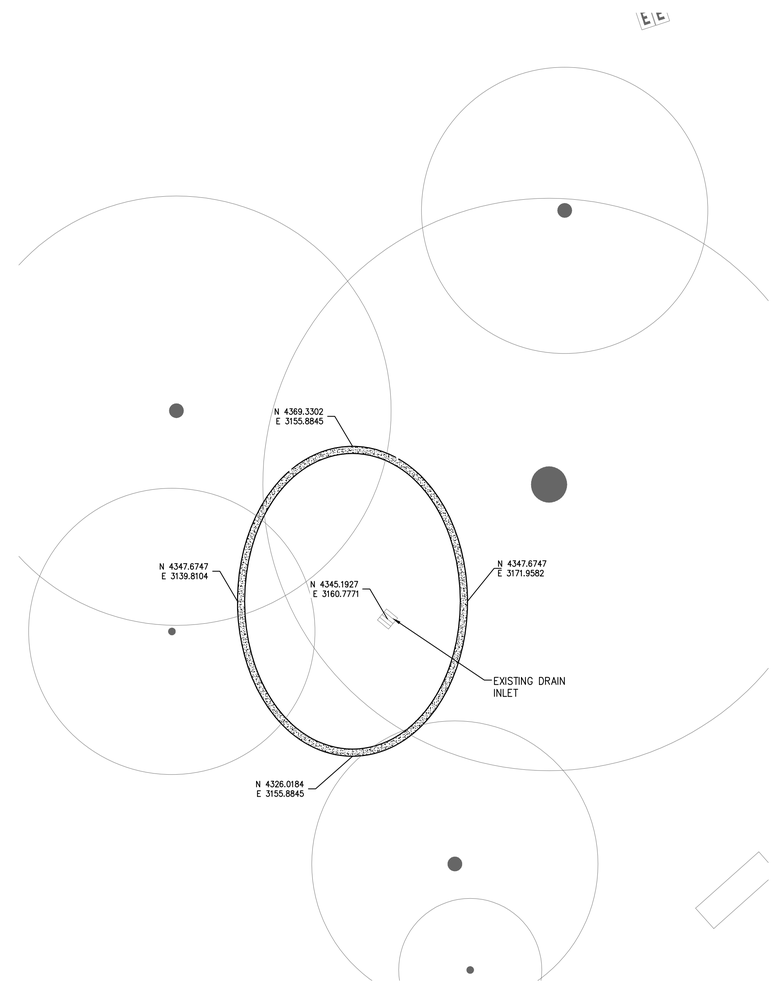

CG - RG - 2

RAIN GARDEN 1"=10'

NOTES

1. REFER TO SHEET CG-C1 SITE PLAN FOR SITE CONTROL.

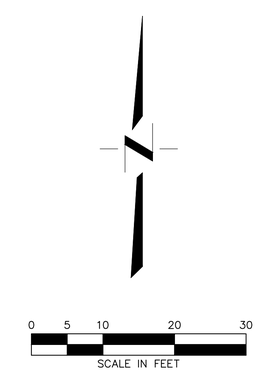

DATE SIGNED: _____

THESE DRAWINGS ARE NOT CONSIDERED FINAL UNTIL THE ENGINEER'S SEAL BELOW HAS BEEN SIGNED AND DATED.

REGISTERED PROFESSIONAL ENGINEER
DANIEL A. FENOCCHIO
No. C51484
CIVIL
STATE OF CALIFORNIA

NO.	DATE	REVISIONS	BY	APPD.

DESIGNED BY NC
DRAWN BY NC
CHECKED BY DF

SCALE 1" = 10'

CECWEST.COM
Project Planning ■ Civil Engineering ■ Landscape Architecture
■ Sacramento Office
2120 20th Street, Suite Three
Sacramento, CA 95818
(916) 455-2026
■ Davis Office
2940 Spafford Street, Suite 200
Davis, CA 95618
(530) 756-2026
CUNNINGHAM ENGINEERING

CONSTRUCTION DOCUMENTS
CSUS LID STORMWATER SYSTEM
CAMPUS GROVE
HORIZONTAL CONTROL PLAN

CALIFORNIA STATE UNIVERSITY, SACRAMENTO CALIFORNIA

SHEET
CG-C2
OF
6

DATE: 4/24/2015

JOB NO: 1432.01

S:\Projects\1400\1432 CSUS - LID Storm Water System\AutoCAD\1432-01-CIVIL CD's\SHEETS\CG - C2 - CTRL.dwg - CG-C2 HORIZONTAL CONTROL 4/13/2015 - 9:44AM Plotted by: charles

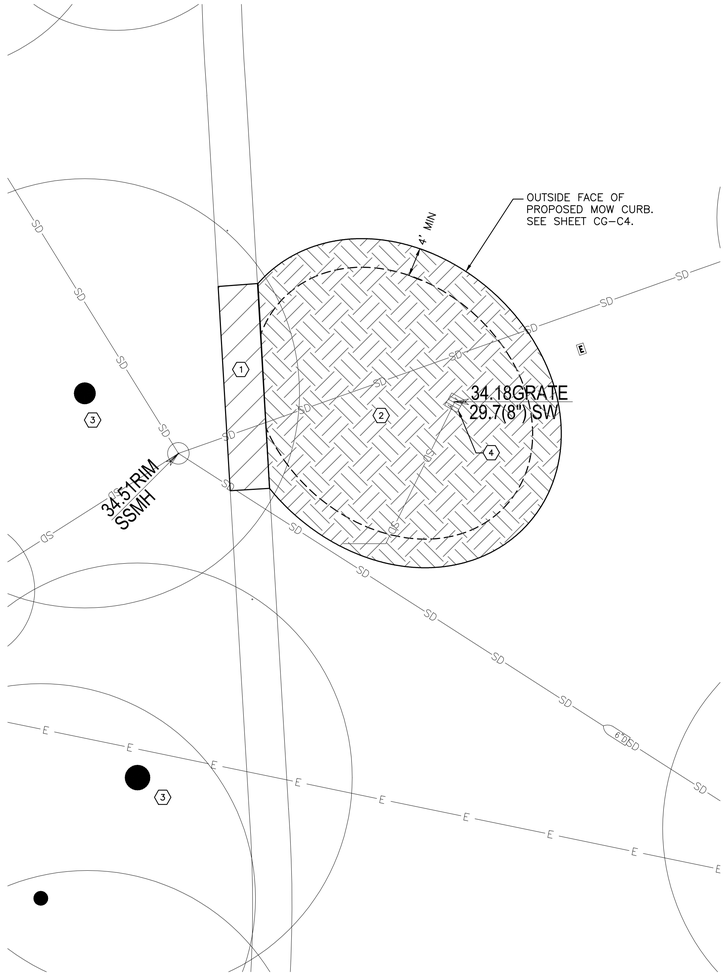

CG - RG - 1

RAIN GARDEN 1"=10'

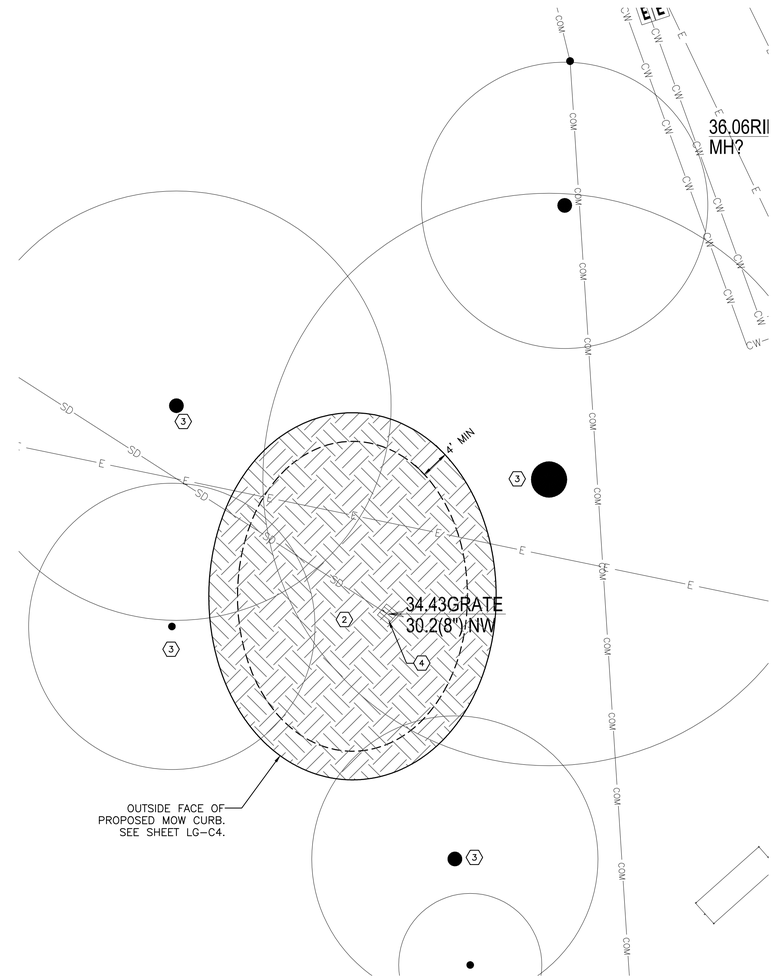

CG - RG - 2

RAIN GARDEN 1"=10'

KEYNOTES:

1. REMOVE EXISTING DG PATH TO EXTENTS SHOWN.
2. REMOVE EXISTING VEGETATION TO EXTENTS SHOWN.
3. PROTECT EXISTING TREE. SEE SHEET T-3 FOR TREE PROTECTION NOTES.
4. PROTECT EXISTING DRAIN INLET.

NOTES:

1. INTENT OF DEMOLITION PLAN IS TO PROVIDE GENERAL SITE DEMOLITION REQUIREMENTS TO CONTRACTOR. PLAN IS NOT INTENDED TO PROVIDE DETAILED INFORMATION ON SITE REMOVAL, PROTECTION AND PHASING. CONTRACTOR SHALL BE RESPONSIBLE FOR PERFORMING SITE VISITS TO DEVELOP A DETAILED DEMOLITION PLAN IN ACCORDANCE WITH THE PROPOSED SITE IMPROVEMENTS.
2. SITE DEMOLITION INCLUDES:
   - REMOVE EXISTING LANDSCAPE AREA.
   - REMOVE/ADJUST EXISTING ABOVE GROUND AND UNDERGROUND IRRIGATION FACILITIES. COORDINATE EXTENT OF IMPROVEMENTS WITH LANDSCAPE PLANS
3. CONTRACTOR SHALL DISPOSE OF ALL MATERIALS PROPERLY OFFSITE.
4. LIMITS OF REMOVAL SHOWN ON THESE PLANS ARE APPROXIMATE. CONTRACTOR SHALL MODIFY LIMITS OF DEMOLITION AS NECESSARY TO PROVIDE FOR NEW CONSTRUCTION, BASED ON CONTRACTOR'S METHOD OF CONSTRUCTION.
5. CONTRACTOR SHALL PROVIDE TRAFFIC CONTROL FLAGGING FOR VEHICULAR INGRESS/EGRESS.
6. PROJECT VEHICULAR AND PEDESTRIAN ACCESS PLAN SHALL BE PREPARED BY CONTRACTOR.
7. THE TYPES, LOCATIONS, SIZES AND/OR DEPTHS OF EXISTING UTILITIES SHOWN ON THESE PLANS WERE OBTAINED FROM SOURCES OF VARYING RELIABILITY. THE CONTRACTOR IS CAUTIONED THAT ONLY ACTUAL EXCAVATION WILL REVEAL THE TYPES, EXTENT, SIZE, LOCATION AND DEPTH OF SUCH UNDERGROUND FACILITIES. HOWEVER, THE ENGINEER CAN ASSUME NO RESPONSIBILITY FOR THE COMPLETENESS OR ACCURACY OF ITS DELINEATION OF SUCH UNDERGROUND FACILITIES NOR FOR THE EXISTENCE OF OTHER BURIED OBJECTS WHICH ARE NOT SHOWN ON THESE PLANS. IF NO ELEVATION IS SHOWN ON THE PLANS THE CONTRACTOR SHALL ASSUME THE ELEVATION IS UNKNOWN.

0 5 10 20 30

SCALE IN FEET

DATE SIGNED: _____

THESE DRAWINGS ARE NOT CONSIDERED FINAL UNTIL THE ENGINEER'S SEAL BELOW HAS BEEN SIGNED AND DATED.

REGISTERED PROFESSIONAL ENGINEER
DANIEL A. FENOCCHIO
No. C51484
CIVIL
STATE OF CALIFORNIA

NO.	DATE	REVISIONS	BY	APPD.

DESIGNED BY NC
DRAWN BY NC
CHECKED BY DF

SCALE 1" = 10'

CECWEST.COM
Project Planning • Civil Engineering • Landscape Architecture
• Sacramento Office
2120 20th Street, Suite Three
Sacramento, CA 95818
(916) 455-2026
• Davis Office
2940 Spafford Street, Suite 200
Davis, CA 95618
(530) 792-2026
CUNNINGHAM ENGINEERING

CONSTRUCTION DOCUMENTS
CSUS LID STORMWATER SYSTEM
CAMPUS GROVE
DEMOLITION PLAN

CALIFORNIA STATE UNIVERSITY, SACRAMENTO CALIFORNIA

SHEET **CG-C3** OF **6**

DATE: 4/24/2015

JOB NO: 1432.01

S:\Projects\1400\1432 CSUS - LID Storm Water System\Autocad\1432-01-CIVIL CD's\SHEETS\CG - C3 - DEMO.dwg - CG 4/13/2015 - 9:45AM Plotted by: charles

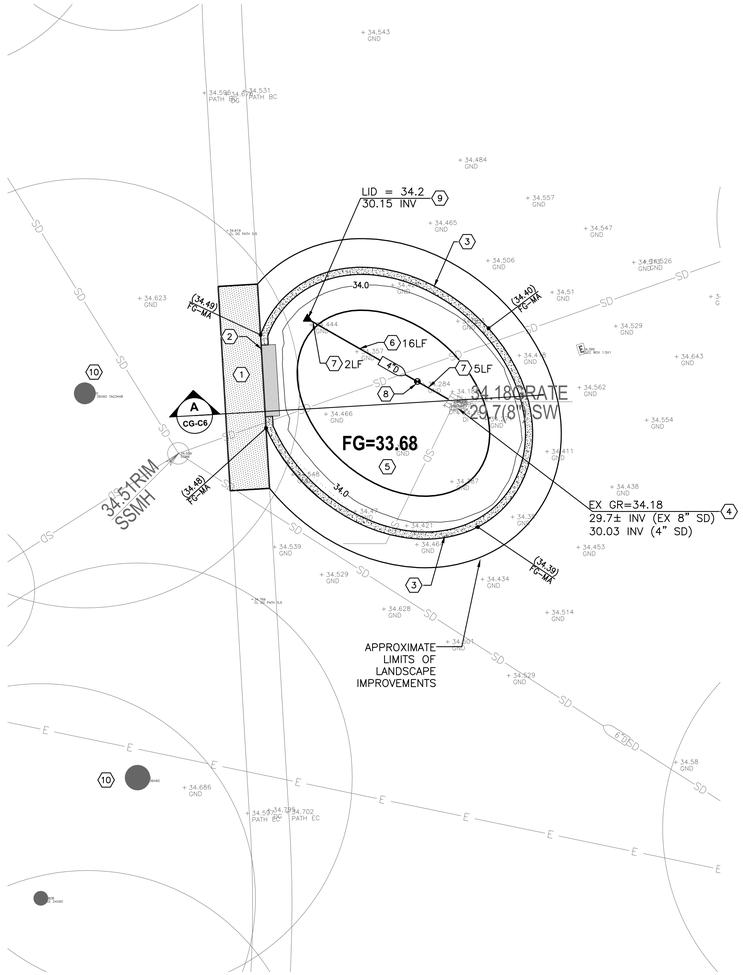

CG - RG - 1

RAIN GARDEN 1"=10'

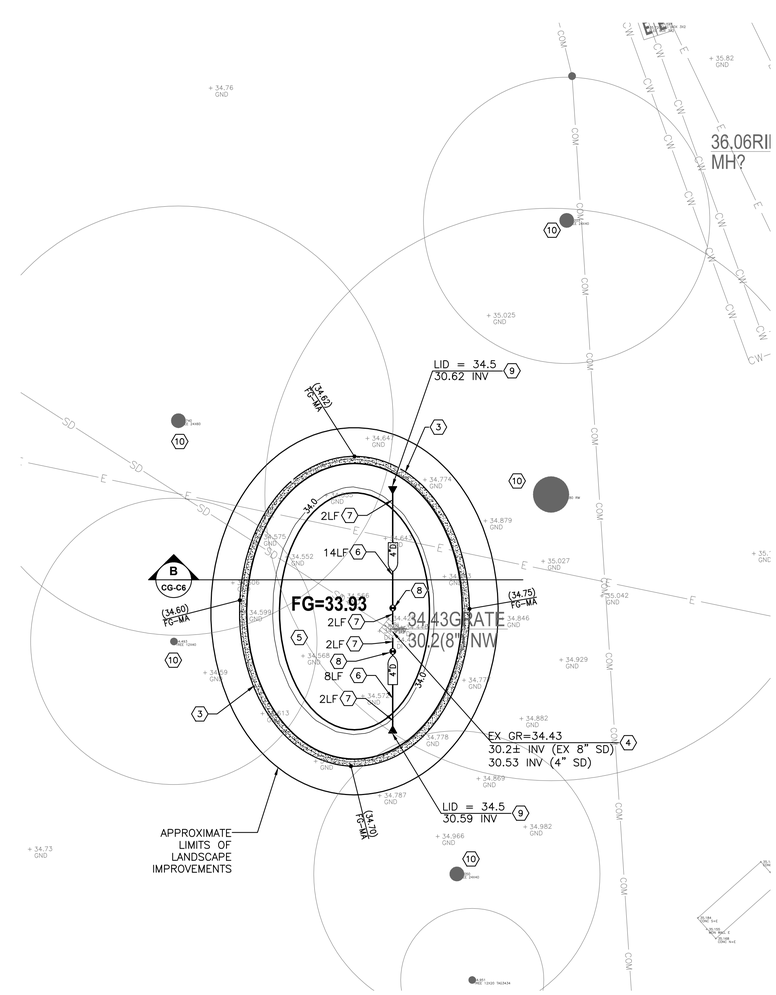

CG - RG - 2

RAIN GARDEN 1"=10'

KEYNOTES:

1. REPLACE EXISTING DECOMPOSED GRANITE PATH IN KIND.
2. CONCRETE WALL. SEE LANDSCAPE PLANS.
3. 12" CONCRETE MOW BAND. SEE LANDSCAPE PLANS.
4. EXISTING DRAIN INLET TO REMAIN.
5. INSTALL NEW RAIN GARDEN AREA PER SECTIONS.
6. INSTALL 4" PERFORATED HDPE STORM DRAIN PIPE SURROUNDED IN 6" (MINIMUM) GRAVEL @ S=0.005. LENGTH PER PLAN. PLACE GEOTEXTILE FABRIC AROUND GRAVEL LAYER.
7. INSTALL 4" HDPE STORM DRAIN PIPE @ S=0.005. LENGTH PER PLAN.
8. INSTALL DRAIN VALVE PER DETAIL 1 ON SHEET CG-C6.
9. INSTALL STORM DRAIN CLEANOUT PER DETAIL 2 ON SHEET CG-C6.
10. EXISTING TREE TO REMAIN. SEE TREE PROTECTION NOTES ON SHEET T-3.

NOTES:

1. CONTRACTOR SHALL ADJUST ALL EXISTING UTILITY STRUCTURES (SHOWN AND NOT SHOWN) TO FINAL GRADE. CONTRACTOR SHALL PERFORM SITE WALK PRIOR TO CONSTRUCTION TO VERIFY ALL EXISTING UTILITY STRUCTURE LOCATIONS. COST OF UTILITY STRUCTURE ADJUSTMENT SHALL BE INCLUDED IN BASE BID.
2. THE TYPES, LOCATIONS, SIZES AND/OR DEPTHS OF EXISTING UTILITIES SHOWN ON THESE PLANS WERE OBTAINED FROM SOURCES OF VARYING RELIABILITY. THE CONTRACTOR IS CAUTIONED THAT ONLY ACTUAL EXCAVATION WILL REVEAL THE TYPES, EXTENT, SIZE, LOCATION AND DEPTH OF SUCH UNDERGROUND FACILITIES. HOWEVER, THE ENGINEER CAN ASSUME NO RESPONSIBILITY FOR THE COMPLETENESS OR ACCURACY OF ITS DELINEATION OF SUCH UNDERGROUND FACILITIES NOR FOR THE EXISTENCE OF OTHER BURIED OBJECTS WHICH ARE NOT SHOWN ON THESE PLANS. IF NO ELEVATION IS SHOWN ON THE PLANS THE CONTRACTOR SHALL ASSUME THE ELEVATION IS UNKNOWN.
3. CONTRACTOR SHALL REPLACE ALL LANDSCAPE AREAS DISTURBED DURING CONSTRUCTION.

0 5 10 20 30

SCALE IN FEET

DATE SIGNED: _____

THESE DRAWINGS ARE NOT CONSIDERED FINAL UNTIL THE ENGINEER'S SEAL BELOW HAS BEEN SIGNED AND DATED.

REGISTERED PROFESSIONAL ENGINEER
DANIEL A. FENOCCHIO
No. C51484
CIVIL
STATE OF CALIFORNIA

DESIGNED BY	NC
DRAWN BY	NC
CHECKED BY	DF
SCALE	1" = 10'

NO.	DATE	REVISIONS	BY	APPD.

CECWEST.COM

Project Planning • Civil Engineering • Landscape Architecture

■ Sacramento Office
2120 20th Street, Suite Three
Sacramento, CA 95818
(916) 455-2026

■ Davis Office
2940 Spafford Street, Suite 200
Davis, CA 95618
(530) 756-2026

CUNNINGHAM ENGINEERING

CONSTRUCTION DOCUMENTS
CSUS LID STORMWATER SYSTEM
CAMPUS GROVE IMPROVEMENT PLAN

CALIFORNIA STATE UNIVERSITY, SACRAMENTO CALIFORNIA

SHEET **CG-C4** OF **6**

DATE: 4/24/2015

JOB NO: 1432.01

S:\Projects\1400\1432 CSUS - LID Storm Water System\AutoCAD\1432-01-CIVIL CD's\SHEETS\CG - C4 - IMPROV.dwg - CG 4/13/2015 - 9:42AM Plotted by: charles

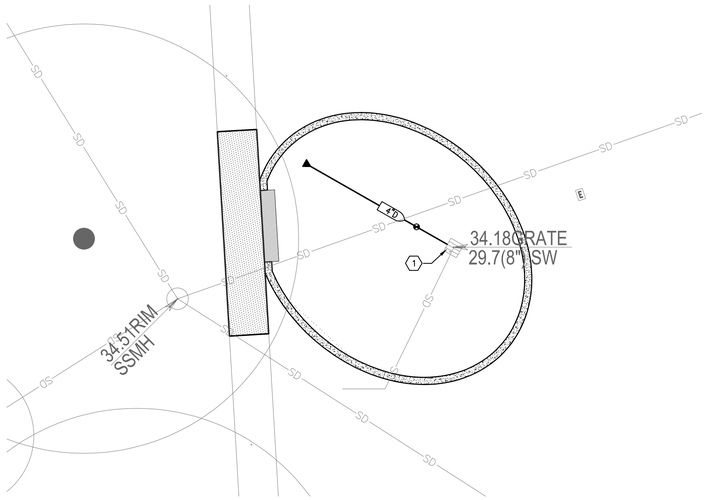

CG - RG - 1
RAIN GARDEN 1"=10'

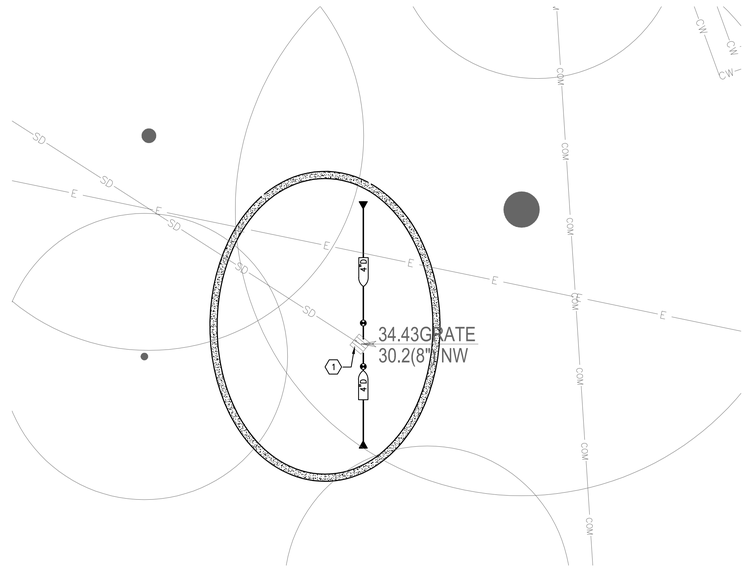

CG - RG - 2
RAIN GARDEN 1"=10'

KEYNOTES

(1) INSTALL STORM DRAIN INLET SEDIMENT CONTROL AND FILTER BAG PER CITY OF SACRAMENTO STANDARD DWG. NOs. Q-20 & Q-30.

NOTES

1. REFER TO SHEET T-3 FOR EROSION CONTROL NOTES.
2. CONTRACTOR SHALL PROVIDE CONCRETE WASHOUT AREA PER CITY OF SACRAMENTO STANDARD DWG. NO. Q-80. CONTRACTOR SHALL COORDINATE LOCATION WITH CSUS REPRESENTATIVE PRIOR TO CONSTRUCTION.
3. CONTRACTOR SHALL COORDINATE WITH CSUS REPRESENTATIVE FOR MATERIAL STORAGE LOCATION PRIOR TO CONSTRUCTION.

0 5 10 20 30
SCALE IN FEET

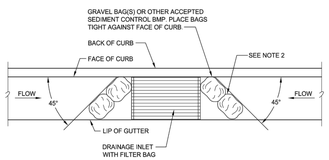

PLAN VIEW

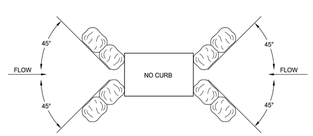

NOTES:

1.- SEDIMENT TRAPPED UPSTREAM OF SEDIMENT CONTROL BMP SHALL BE REMOVED WEEKLY AND PRIOR TO A RAINFALL EVENT.

2.- PLACE BMPS TIGHTLY TOGETHER AT JOINTS TO PREVENT OR MINIMIZE SEEPAGE AT JOINTS.

3.- INLET SEDIMENT CONTROL MUST BE INSPECTED WEEKLY AND AFTER EACH STORM, AND REPAIRED OR REPLACED AS NEEDED.

4.- INLET SEDIMENT CONTROL IS REQUIRED FOR ALL D's IN ADDITION TO A STORM DRAIN INLET FILTER BAG.

REV.	DATE	DESCRIPTION

R:\Utilities\City_Site_Details\Qty_Details\Q_25_InletSedimentControl.DWG

CITY OF SACRAMENTO
DEPARTMENT OF UTILITIES

INLET SEDIMENT CONTROL

APPR'D BY: D. DORAN NO SCALE
DATE: MAY 2007 DWG. NO. Q - 20

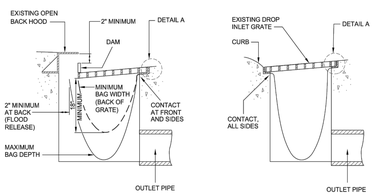

NOTES:

1.- THE MAXIMUM DRAINAGE AREA PER FILTER SHALL BE NO MORE THAN 2 ACRES.

2.- THE FILTER BAG SHALL BE MANUFACTURED FROM UV RESISTANT POLYPROPYLENE, NYLON, POLYESTER, OR ETHYLENE FABRIC WITH A MINIMUM TENSILE STRENGTH OF 50 LBS PER LINEAL FOOT. AN EQUIVALENT OPENING SIZE NOT GREATER THAN 20 SIEVE AND WITH A MINIMUM FLOW RATE OF 40 GALLONS/MINUTE/SQ FT.

3.- THE FILTER BAG MAY BE SUSPENDED FROM OR HELD IN PLACE BY THE EXISTING INLET GRATE (OR OTHER APPROVED METHOD). PROVIDING NO MODIFICATION OR DAMAGE SHALL BE DONE TO THE INLET GRATE OR FRAME. THE INLET GRATE SHALL NOT BE CAUSED TO REST MORE THAN 0.5" ABOVE THE INLET FRAME (SEE DETAIL A).

4.- THE FILTER BAG MAY EXTEND TO THE BOTTOM OF THE INLET BOX PROVIDED THE OUTLET PIPE IS UNOBSTRUCTED.

5.- FLOWS SHALL NOT BE ALLOWED TO BYPASS THE BAG. THE BAG OR ITS FRAME SHALL CATCH FLOWS AT ALL SIDES OF THE INLET, EXCEPT AS SHOWN FOR FLOOD RELEASE.

6.- INLET FILTER BAGS SHALL BE INSPECTED WEEKLY AND AFTER EACH RAINFALL DURING THE WET SEASON AND MONTHLY DURING THE DRY SEASON. SEDIMENT AND DEBRIS SHALL BE REMOVED BEFORE ACCUMULATIONS HAVE REACHED ONE THIRD THE DEPTH OF THE BAG. BAGS SHALL BE REPAIRED OR REPLACED AS SOON AS DAMAGE OCCURS.

7.- THIS DETAIL IS SCHEMATIC AND MUST BE ADJUSTED FOR DIFFERENT DI TYPES.

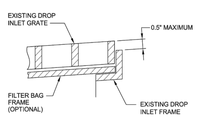

DETAIL A

REV.	DATE	DESCRIPTION

R:\Utilities\City_Site_Details\Qty_Details\Q_30_StormDrainFilterBag.DWG

CITY OF SACRAMENTO
DEPARTMENT OF UTILITIES

STORM DRAIN INLET FILTER BAG

APPR'D BY: D. DORAN NO SCALE
DATE: MAY 2007 DWG. NO. Q - 30

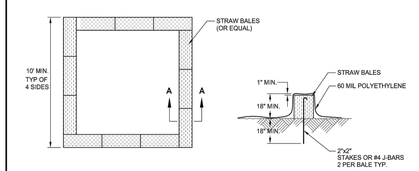

BALE CONFIGURATION

SECTION A-A

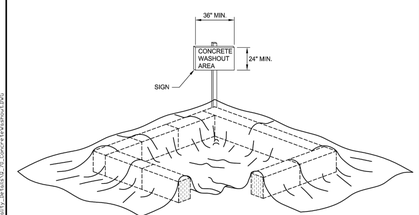

THIS SECTION REMOVED FOR GRAPHICAL REPRESENTATION ONLY. STRAW BALE PERIMETER SHALL BE CONTINUOUS.

NOTES:

1.- FACE SIGN TOWARD NEAREST STREET OR ACCESS POINT

2.- CONCRETE WASHOUT SHALL BE LOCATED BEHIND CURB AND 50 FT. MINIMUM FROM DRAINAGE INLETS OR WATERCOURSES

REV.	DATE	DESCRIPTION

R:\Utilities\City_Site_Details\Qty_Details\Q_70_ConcreteWashout.DWG

CITY OF SACRAMENTO
DEPARTMENT OF UTILITIES

CONCRETE WASHOUT

APPR'D BY: D. DORAN NO SCALE
DATE: MAY 2007 DWG. NO. Q - 80

DATE SIGNED: _____

THESE DRAWINGS ARE NOT CONSIDERED FINAL UNTIL THE ENGINEER'S SEAL BELOW HAS BEEN SIGNED AND DATED.

REGISTERED PROFESSIONAL ENGINEER
DANIEL A. FENOCCHIO
No. C51484
CIVIL
STATE OF CALIFORNIA

NO.	DATE	REVISIONS	BY	APPD.

DESIGNED BY NC
DRAWN BY NC
CHECKED BY DF
SCALE 1" = 10'

CECWEST.COM
Project Planning ■ Civil Engineering ■ Landscape Architecture
■ Sacramento Office
2120 20th Street, Suite Three
Sacramento, CA 95818
(916) 435-2026
■ Davis Office
2940 Spafford Street, Suite 200
Davis, CA 95618
(530) 792-2026
CUNNINGHAM ENGINEERING

CONSTRUCTION DOCUMENTS
CSUS LID STORMWATER SYSTEM
CAMPUS GROVE
EROSION CONTROL PLAN

CALIFORNIA STATE UNIVERSITY, SACRAMENTO CALIFORNIA

SHEET
CG-C5
OF
6

DATE: 4/24/2015

JOB NO: 1432.01

S:\Projects\1400\1432 CSUS - LID Storm Water System\AutoCAD\1432-01-CIVIL CD's\SHEETS\CG - C5 - EROS.dwg - CG 4/15/2015 - 3:11PM Plotted by: charles

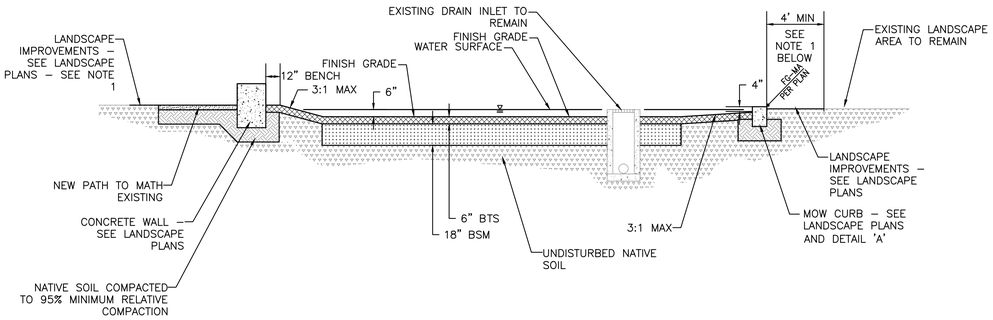

A / CG-C4 **CAMPUS GROVE RG-1 RAIN GARDEN NTS**

NOTES

1. LIMITS OF LANDSCAPE REMOVAL AND REPLACEMENT SHOWN ON THESE PLANS ARE APPROXIMATE. CONTRACTOR SHALL INCREASE LIMITS AS NEEDED BASED ON ACTUAL FIELD CONDITIONS AND CONTRACTOR'S METHOD OF CONSTRUCTION.

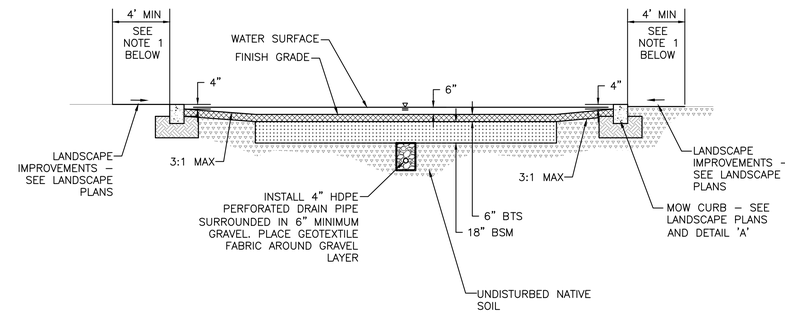

B / CG-C4 **CAMPUS GROVE RG-2 RAIN GARDEN NTS**

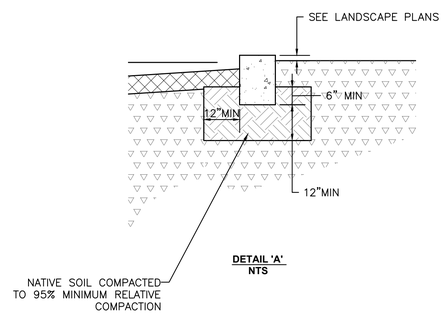

DETAIL 'A'
NTS

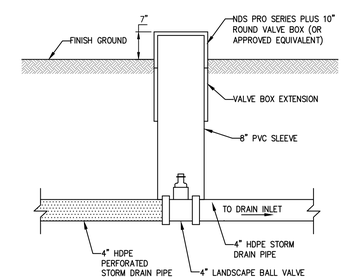

1 / CG-C4 **DRAIN VALVE DETAIL**
NTS

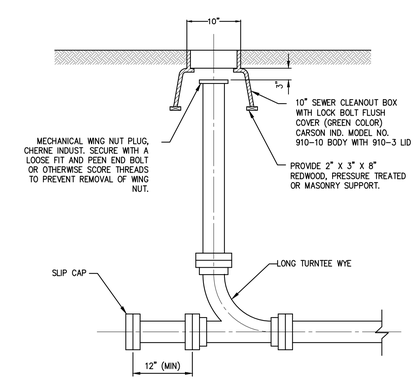

2 / LG-C4 **STORM DRAIN CLEANOUT DETAIL**
NTS

DATE SIGNED: _____

THESE DRAWINGS ARE NOT CONSIDERED FINAL UNTIL THE ENGINEER'S SEAL BELOW HAS BEEN SIGNED AND DATED.

REGISTERED PROFESSIONAL ENGINEER DANIEL A. FENOCCHIO No. C51484 CIVIL STATE OF CALIFORNIA

NO.	DATE	REVISIONS	BY	APPD.

DESIGNED BY NC
DRAWN BY NC
CHECKED BY DF

SCALE NTS

CECWEST.COM

Project Planning • Civil Engineering • Landscape Architecture

• Sacramento Office
2120 20th Street, Suite Three
Sacramento, CA 95818
(916) 455-2026

• Davis Office
2940 Spafford Street, Suite 200
Davis, CA 95618
(530) 756-2026

CUNNINGHAM ENGINEERING

CONSTRUCTION DOCUMENTS
CSUS LID STORMWATER SYSTEM
CAMPUS GROVE SECTIONS & DETAILS

CALIFORNIA STATE UNIVERSITY, SACRAMENTO CALIFORNIA

SHEET **CG-C6** OF **6**

DATE: 4/24/2015

JOB NO: 1432.01

S:\Projects\1400\1432 CSUS - LID Storm Water System\AutoCAD\1432-01-CIVIL CDs\SHEETS\CG - 06 - DETL.dwg - CG 4/22/2015 - 12:23PM Plotted by: charles